Protective screens made of safety glass
as modular system kit - safe, scratch-resistant, durable

Our business partner **AGC Glass Europe** from Belgium has developed a modular system for protective screens made of safety glass which we would like to offer as a durable and ecological solution:
FeelInSafe from ShapeYourGlass by AGC

Compared with existing plastic solutions, safety glass is more transparent and solid, more scratch-resistant and durable: it doesn't fade over time or under the effects of alcohol-based detergent.

This solution helps to maintain social distance, protects your employees as well as your customers and enables social interaction at the same time.

Please feel free to contact us:
+49 241 94936-0 | mail@meraum.de

All versions are available at short notice.

Protective screens made of safety glass
FeelInSafe from ShapeYourGlass by AGC

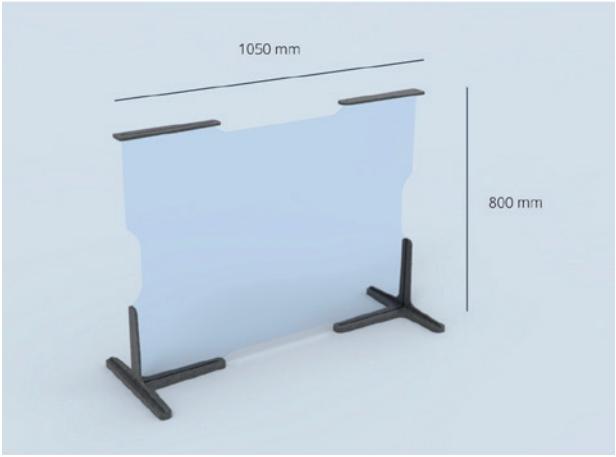

Version simple - protection screen

Interesting for office spaces or as counter protection for stores and reception areas. The opening at the bottom is for exchanging documents and goods.

Price is VAT excluded: 150 €
incl. mounting material

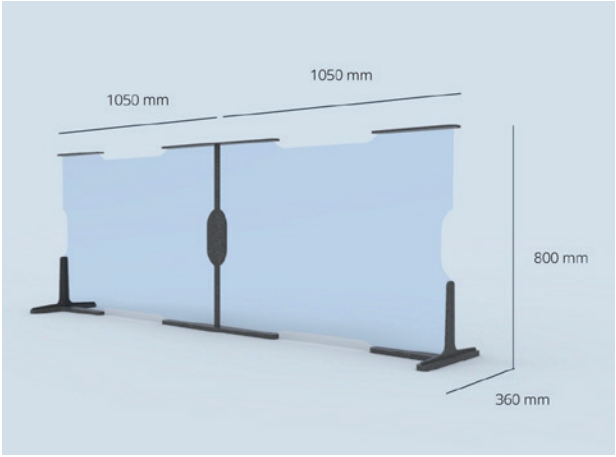

Version I – a panoramic protection

We can place lateral supports inside or outside of the glass depending on the table on which it is installed.

Price is VAT excluded: 300 €
incl. mounting material

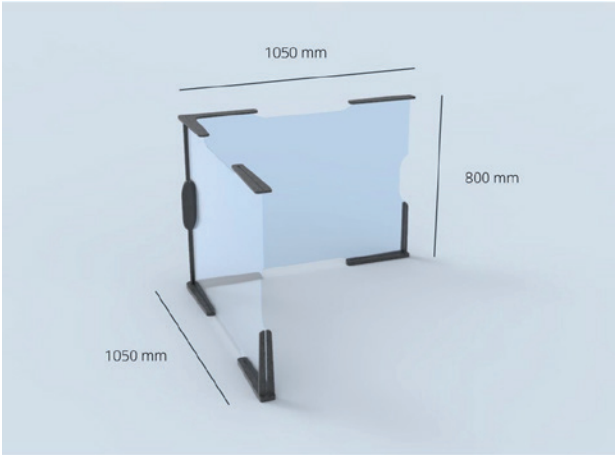

Version L - angle protection

This can fit the edges of a table and allows protection from two directions.

Price is VAT excluded: 300 €
incl. mounting material

Protective screens made of safety glass
FeelInSafe from ShapeYourGlass by AGC

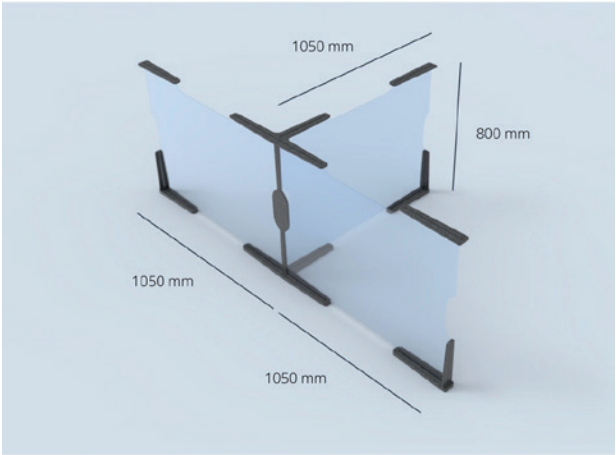

Version T - angle protection

Especially interesting for cashiers or counters areas.

Price is VAT excluded: 450 €
incl. mounting material

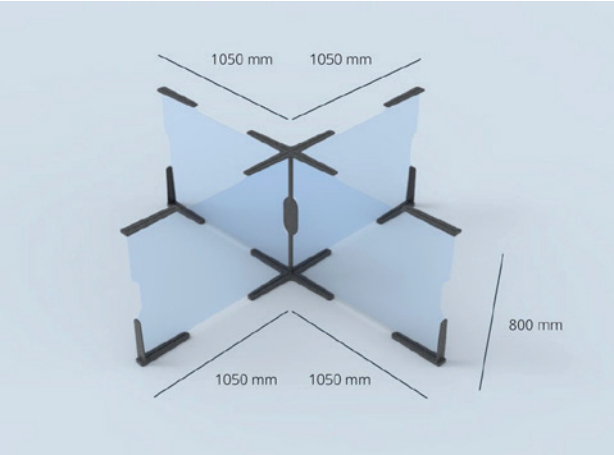

Version X – cross protection

Cross-piece to divide a work-space in four areas.

Price is VAT excluded: 600,00 €
incl. mounting material

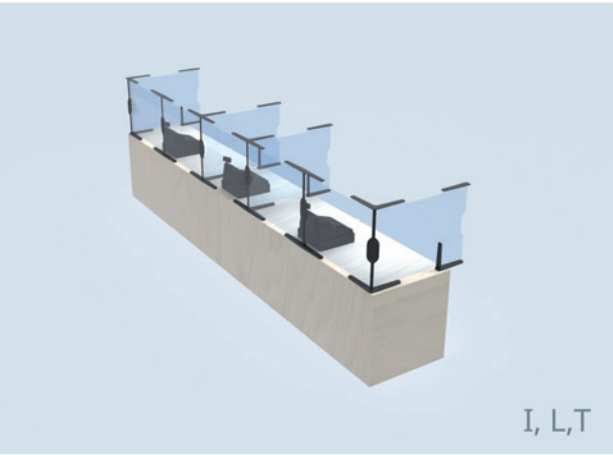

Application example

Glass thickness is 5mm and the screens are 1050 mm x 800 mm each. We can place lateral supports inside or outside of the glass depending on the table on which it is installed.

All modules can be used in portrait mode as well.

MeRaum messebau

Temporary architecture for long-lasting brand success. Stand construction in Aachen for all of Europe.

Design – Planning – Realization

Our own success is closely linked to that of our customers. This is why we always focus on those factors that make our customers successful. The first and most important step in each project is to listen and to understand the goals. Good design as well as a high-quality and technically sound solution are a must.

What makes us different is that we see it as our duty to provide security for our customers. The security each customer needs, to know that his pressing tasks that are critical for success are in good hands.

MeRaum GmbH | Wurmbenden 22 – 24, D-52070 Aachen
Phone: +49 241 94936-0 | Fax: +49 241 94936-29
E-Mail: mail@meraum.de | Web: www.meraum.de

SHAPE YOUR GLASS
powered by AGC Glass Europe